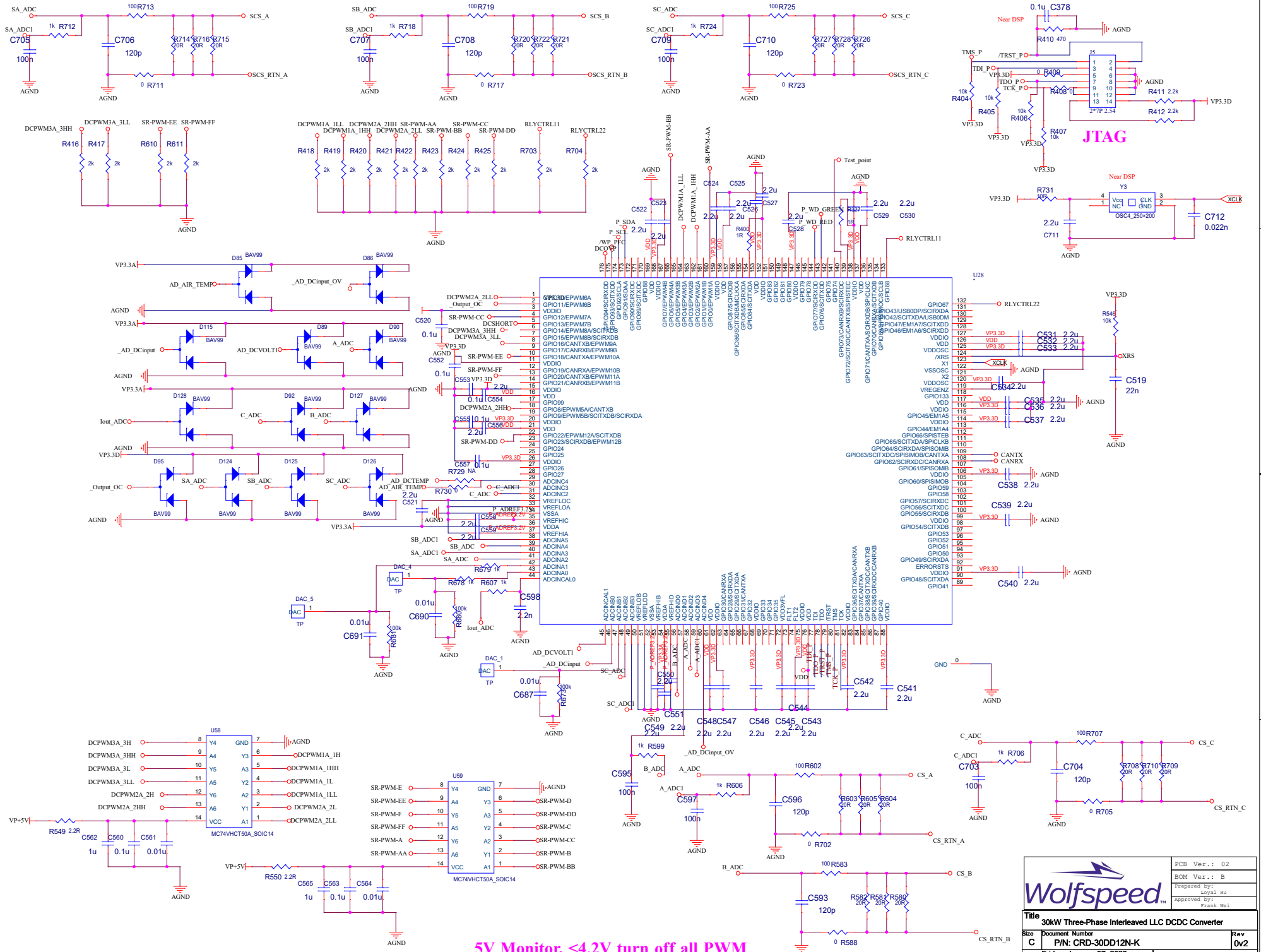
JTAG
5V Monitor, <4.2V turn off all PWM
U28
U58
U59
MC74VHCT50A_SOIC14
Wolfspeed
PCB Ver.: 02
BOM Ver.: B
Prepared by: Loyal Hu
Approved by: Frank Wei
Title
30kW Three-Phase Interleaved LLC DCDC Converter
Size C
Document Number
P/N: CRD-30DD12N-K
Rev 0v2
Date: Friday, January 07, 2022
Sheet 1 of 4

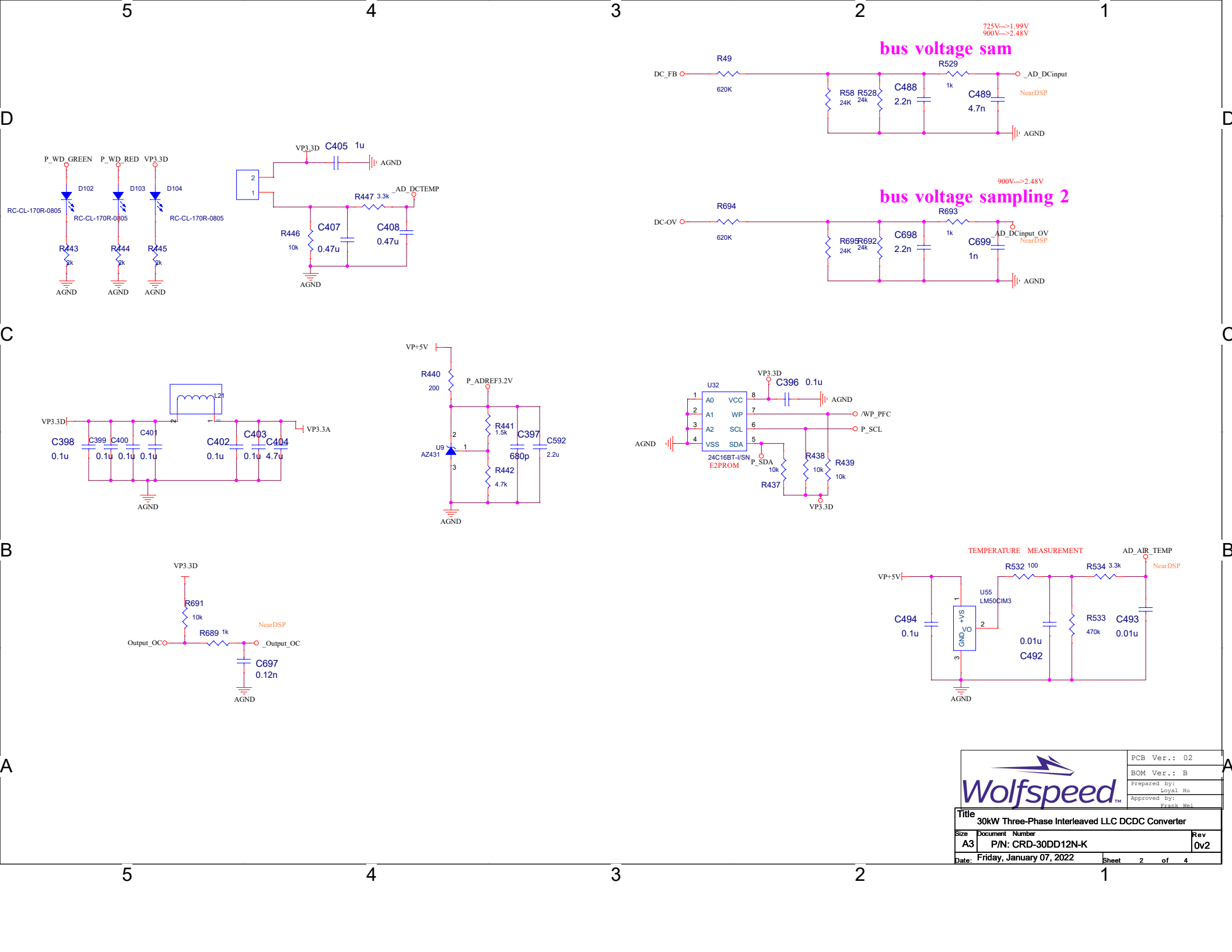
bus voltage sam
725V--->1.99V
900V--->2.48V
DC_FB
R49
620K
R58 24K
R528 24k
C488 2.2n
R529 1k
C489 4.7n
_AD_DCinput
NearDSP
AGND
bus voltage sampling 2
900V--->2.48V
DC-OV
R694
620K
R695 24K
R692 24k
C698 2.2n
R693 1k
C699 1n
_AD_DCinput_OV
NearDSP
AGND
P_WD_GREEN
P_WD_RED
VP3.3D
D102
D103
D104
RC-CL-170R-0805
R443 2k
R444 2k
R445 2k
VP3.3D
C405 1u
_AD_DCTEMP
R447 3.3k
R446 10k
C407 0.47u
C408 0.47u
VP3.3D
C398 0.1u
C399 0.1u
C400 0.1u
C401 0.1u
L21
C402 0.1u
C403 0.1u
C404 4.7u
VP3.3A
VP+5V
R440 200
P_ADREF3.2V
U9 AZ431
R441 1.5k
R442 4.7k
C397 680p
C592 2.2u
U32
A0
A1
A2
VSS
VCC
WP
SCL
SDA
24C16BT-I/SN
E2PROM
VP3.3D
C396 0.1u
/WP_PFC
P_SCL
P_SDA
R438 10k
R439 10k
R437 10k
VP3.3D
VP3.3D
R691 10k
R689 1k
Output_OC
_Output_OC
NearDSP
C697 0.12n
TEMPERATURE MEASUREMENT
AD_AIR_TEMP
NearDSP
VP+5V
R532 100
R534 3.3k
U55 LM50CIM3
C494 0.1u
0.01u C492
R533 470k
C493 0.01u
Wolfspeed
PCB Ver.: 02
BOM Ver.: B
Prepared by: Loyal Hu
Approved by: Frank Wei
Title 30kW Three-Phase Interleaved LLC DCDC Converter
Size A3
Document Number P/N: CRD-30DD12N-K
Rev 0v2
Date: Friday, January 07, 2022
Sheet 2 of 4

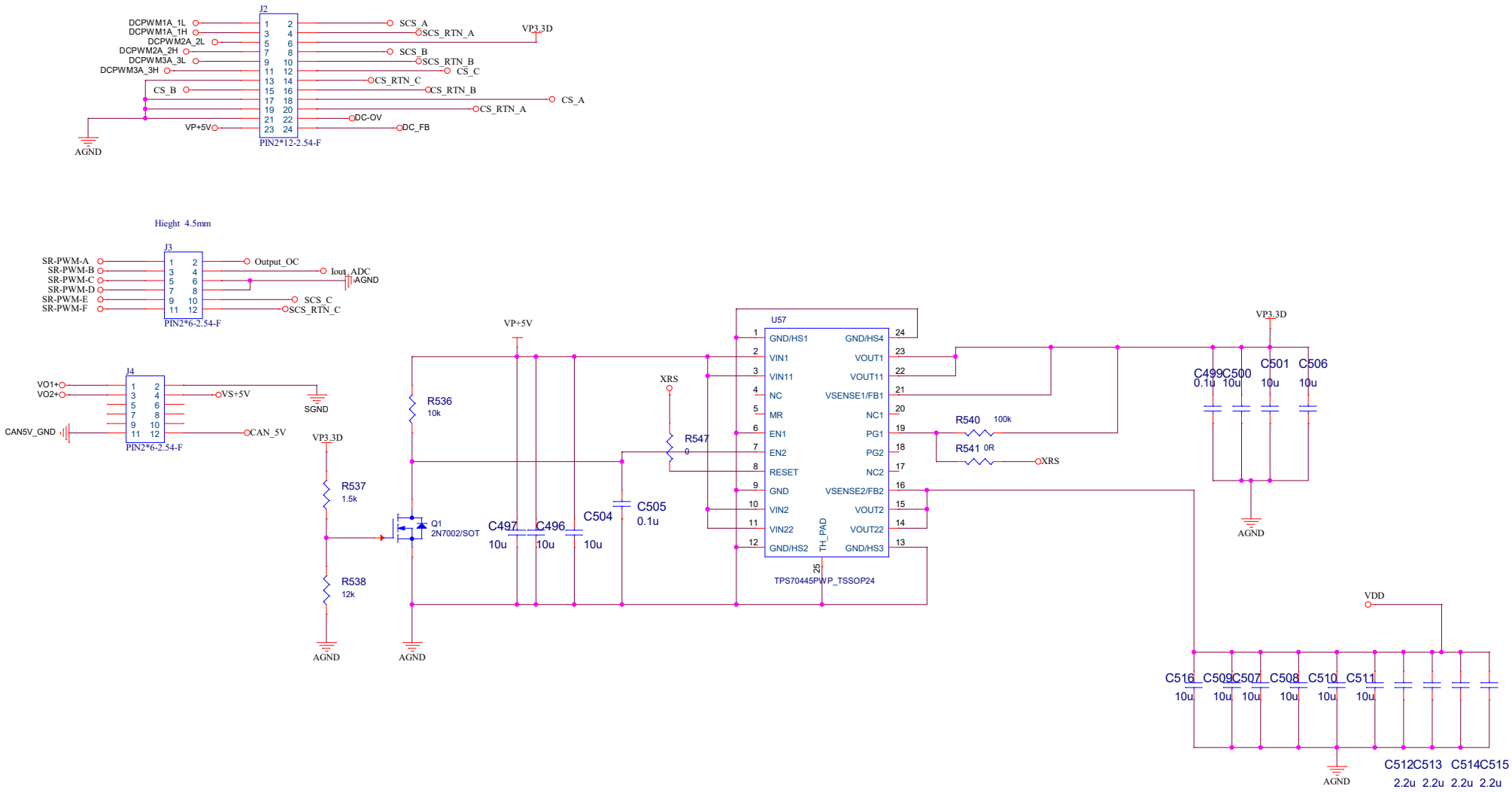

Wolfspeed

PCB Ver.:	02
BOM Ver.:	B
Prepared by:	Loyal Hu
Approved by:	Frank Wei

Title: 30kW Three-Phase Interleaved LLC DCDC Converter

Size	Document Number	Rev
A3	P/N: CRD-30DD12N-K	0v2

Date: Friday, January 07, 2022 Sheet 3 of 4

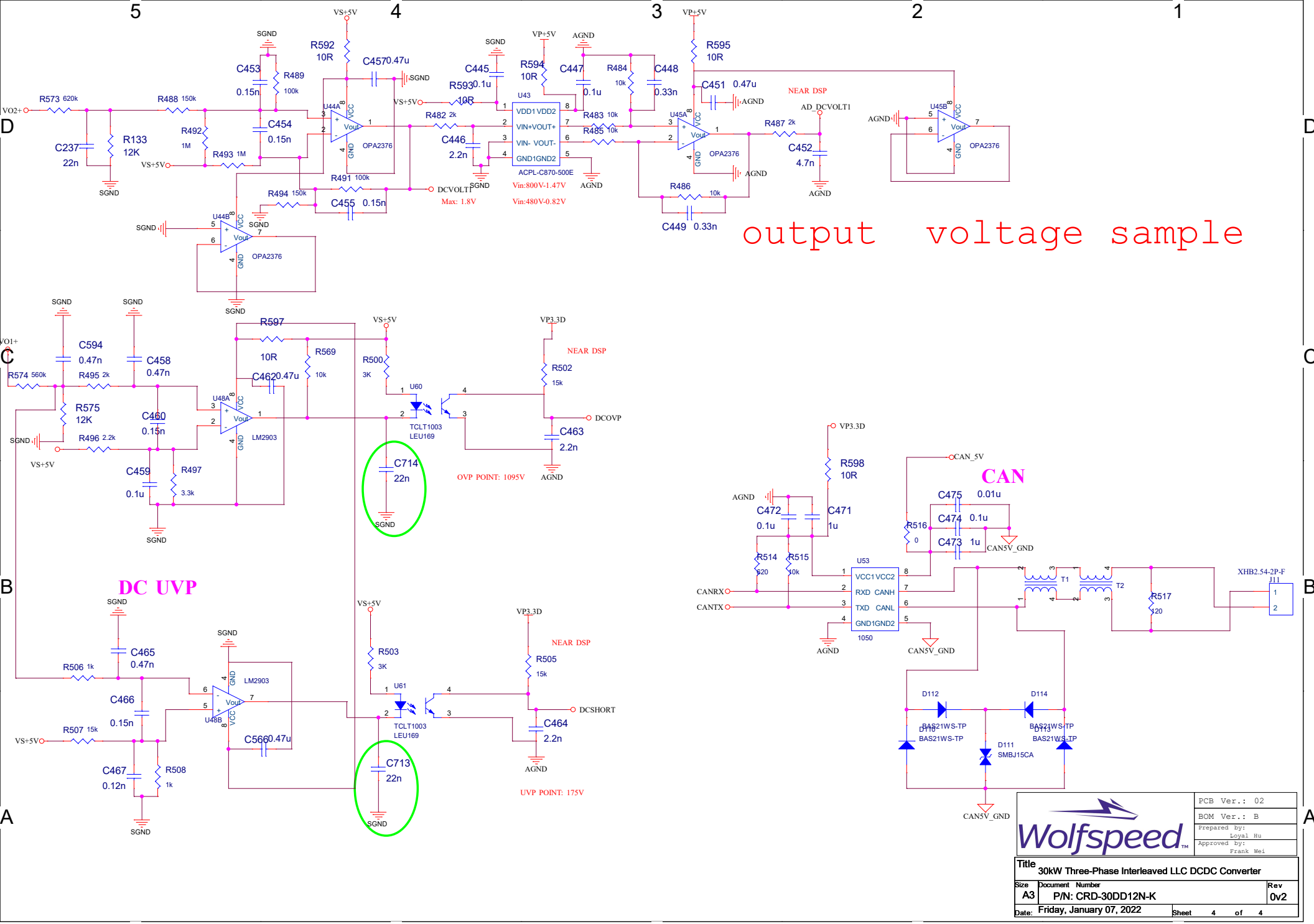
output voltage sample
DC UVP
CAN
VO2+
VO1+
DCVOLT1
Max: 1.8V
U43
ACPL-C870-500E
Vin:800V-1.47V
Vin:480V-0.82V
U44A
U44B
U45A
U45B
OPA2376
U48A
U48B
LM2903
U60
U61
TCLT1003
LEU169
NEAR DSP
AD_DCVOLT1
DCOVP
OVP POINT: 1095V
DCSHORT
UVP POINT: 175V
U53
CANRX
CANTX
CAN_5V
CAN5V_GND
T1
T2
XHB2.54-2P-F
J11
D112
D113
D114
D110
D111
BAS21WS-TP
SMBJ15CA
Wolfspeed
PCB Ver.: 02
BOM Ver.: B
Prepared by: Loyal Hu
Approved by: Frank Wei
Title
30kW Three-Phase Interleaved LLC DCDC Converter
Size A3
Document Number
P/N: CRD-30DD12N-K
Rev 0v2
Date: Friday, January 07, 2022
Sheet 4 of 4